T2R2 東京工業大学リサーチリポジトリ
Tokyo Tech Research Repository

論文 / 著書情報
Article / Book Information

Title	Empirical Study of a Long-Reach Articulated Modular Manipulator Driven by Thrusters
Authors	Yusuke Ueno, Tetsuo Hagiwara, Hiroyuki Nabae, Koichi Suzumori, Gen Endo
Citation	Proceedings of the 2022 IEEE/SICE International Symposium on System Integration, , , pp. 452-458
Pub. date	2022, 1
Copyright	(c) 2022 IEEE. Personal use of this material is permitted. Permission from IEEE must be obtained for all other uses, in any current or future media, including reprinting/republishing this material for advertising or promotional purposes, creating new collective works, for resale or redistribution to servers or lists, or reuse of any copyrighted component of this work in other works.
DOI	http://dx.doi.org/10.1109/SII52469.2022.9708827
Note	This file is author (final) version.

Powered by T2R2 (Tokyo Institute Research Repository)

Empirical Study of a Long-reach Articulated Modular Manipulator Driven by Thrusters

Yusuke Ueno, Tetsuo Hagiwara, Hiroyuki Nabae, Koichi Suzumori, and Gen Endo

***Abstract*— Robotic manipulators using thrusters for weight compensation are an active research topic due to their potential to exceed the limits of maximum length. Due to the constraints of the cubic-square law, the structure of large manipulators must be flexible, making hardware development a very difficult issue. This paper focuses on overcoming these problems by installing inertial measurement units and microcontrollers in each unit to control thrusters locally and suppress torsional deformation around roll axis of the manipulator. Control algorithms for keeping the pitch thrusters horizontally were proposed and evaluated by prototype experiments. The effectiveness of the method to achieve the desired pitch joint angle and roll attitude by three proportional integral derivative controllers was demonstrated. In addition, the prototype showed that the system can cope with wind blowing to some extent. Consequently, the prototype which is 9.3-m-long with 6 DOF was controlled its joint positions and the prototype which is 12.4-m-long with 8 DOF was floated successfully. These results surpassed the maximum length of the manipulator achieved by previous studies by about 3-m-long.**

I. INTRODUCTION

A long-reach articulated manipulator is required for various tasks, such as infrastructure inspection, decommissioning work for Fukushima Daiichi Nuclear Power Plants, and pesticide spraying in agricultural fields. However, the development of hardware for long-reach articulated manipulators is difficult. Suppose we develop a super long reach manipulator using a conventional actuator in the joint. In that case, the proximal joint has to generate a large amount of torque to lift the distal actuators, which are usually heavy. Therefore how to compensate for their own weight is a challenging design problem. Those developed in previous researches were supported by crane-like telescopic mechanisms, wire drive mechanisms [1][2], or springs [3][4][5][6][7]. However, their masses are still heavy, and it is difficult to realize even larger manipulators in the same way.

Currently, multicopter aerial robots, commonly known as drones, are a very active research topic, and the above tasks can be performed by drones. However, aerial robots are very sensitive to weather conditions and may crash, possibly leading to fatal accidents. In addition, the working time is very limited. For example, it was limited to 20-30 minutes for electric quadcopters and 2-3 hours for engine driven quadcopters. Tethered drones are one option to solve these energy problems, however they are limited to operating just above the ground base due to cable tension constraints.

To overcome this problem, we adopted thrusters for the weight compensation of the manipulator[8]. Assuming that there is no limitation for energy source, we can achieve the above goal by placing each thruster at an appropriate position and controlling the thrust force. The proposed mechanical design individually compensates for the gravity acting on each unit, and thus gravitational torque does not propagate from distal to proximal. The proposed design does not require installing the larger actuator for the proximal joints, eventually reducing the total weight of the manipulator.

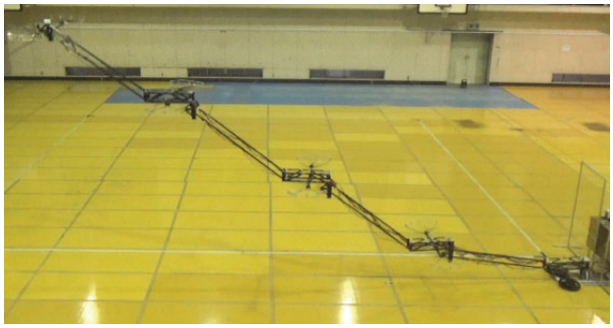

Fig. 1. Hiryu-II manipulator

Some studies have adopted water jets as thrusters[9][10][11]. However, it is difficult to obtain a sufficient jet for weight compensation because water is heavy, which limits the maximum length of the manipulator. If we choose propellers driven by electric motors, we can realize a large manipulator by connecting the power cable in a ”daisy chain”.

In terms of propeller-driven joints, our idea is similar to that of LASDRA[12]. LASDRA requires eight propellers for each link due to the purpose of generating a three-axis force at a spherical joint with propeller thrust force[13], which means that only few actuators contribute to the weight compensation. Therefore, the maximum length of the manipulator is also limited in this case. Compared to this, in our previous work, we introduced a parallel link mechanism so that the thruster always follows the direction of gravity shown in Fig. 1, aiming at a more practical and simple system[8][14]. Thanks to the parallel link mechanism, the thrust force can be constant without depending on the pitch joint angle, and its control can be remarkably simplified. However, even with the Hiryu manipulators, there was a limit to the maximum length of the prototype. The joint position could be controlled up to 6.6-m-long with 6 degrees of freedom(DOF), and floating was possible up to 8.8-m-long with 8 DOF[14].

Therefore, the purpose of this paper is to break through the limit of maximum length and realize a larger Hiryu manipulator with a prototype. Due to the constraints of the cubic-square law, the structure of large manipulators must be flexible, making hardware development a very difficult task. Even if the hardware for a 1-m-long manipulator can

TABLE I. The maximum length achieved by the Hiryu manipulator. Hiryu-II-C is proposed in this paper.

	Successful control of joint position.	Successful floating.
Hiryu-I[8]	3.0-m-long, 6 DOF	5.0-m-long, 6 DOF
Hiyru-II[14]	6.6-m-long, 6 DOF	8.8-m-long, 8 DOF
Hiryu-II-C	9.3-m-long, 6 DOF	12.4-m-long, 8DOF

be developed, it is not clear whether a 5-m-long or 10-m-long manipulator can be developed as well. The problems that became apparent in previous research were torsional deformation around the roll axis of the manipulator and the mass of the electrical cable. To solve the above problem, we installed inertial measurement units and microcontrollers in each unit to control multiple thrusters and suppress torsional deformation. We will also reduce the length of each electrical cable by controlling them locally. As a result, we obtained the results shown in Table I and report them here.

The rest of this paper is organized as follows. In Section II, We explained developed prototypes Hiryu-II-B and Hiryu-II-C, and discussed the advantages and disadvantages with regard to the number of thrusters for weight compensation in each unit. Control algorithms were also proposed to keep the thrusters for weight compensation horizontally. The breakthrough experiment with regard to maximum length by the prototype was described in Section III. In addition to joint position control experiments and floating experiments, the proposed control algorithms and robustness of the prototype against wind blow were evaluated. Finally, discussions of the aforementioned experiments are described in Section IV.

II. PROTOTYPE OVERVIEW

In this section, we propose new Hiryu manipulators equipped with one IMU and four thrusters for weight compensation in each unit. By controlling the roll attitude to be horizontal with four thrusters for weight compensation, it is expected to maintain the horizontality of them and improve the control performance of the pitch and yaw joints of the manipulator. Figure 2b shows a comparison of the proposed manipulator's mechanism configuration with previous work Hiryu-II. Similar to Hiryu-II, proposed manipulators also have a parallel link mechanism consisting of passive joints. parallel link mechanism are serially connected by the passive joint around the yaw axis.

The major design improvements from Hiryu-II can be roughly divided into the following three points.

1) Installation of IMU on the distal link of each unit
2) Weight compensation by four thrusters in each unit
3) Abolition of offset with regard to parallel link mechanism

First, Hiryu manipulator can cancel out most of the moments at each unit by determining the weight compensating thruster position from the static equilibrium equation. However, when the number of degrees of freedom was increased, the accumulation of errors in the thruster position caused vibration of the system[14]. To suppress the vibration, we adopted the IMU because of its mass and ease of installation on the manipulator.

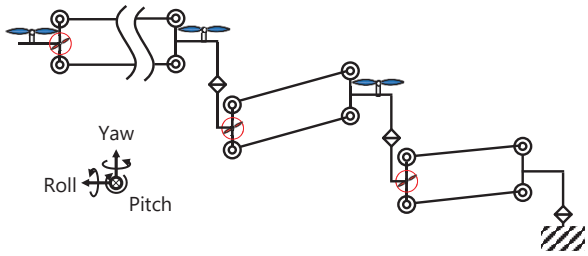

(a) Hiryu-II. This manipulator has been proposed in previous work[14].

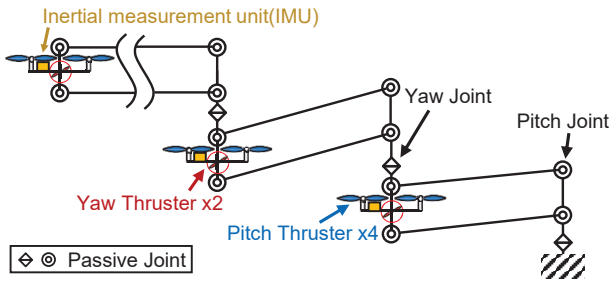

(b) New Hiryu manipulator proposed in this paper.

Fig. 2. Comparison of mechanism configuration. Of the N parallel links, we define the most proximal as 1st unit, and the most distal as N-th unit.

TABLE II. Comparison of the number of thrusters used for weight compensation and horizontal holding.

(a) Horizontal holding by two propellers.

Advantages	Simple mechanism.
Disadvantages	Residual reaction torque generated by thrusters. Only roll axis can be held horizontally.

(b) Horizontal holding by four propellers.

Advantages	Reaction torque can be ignored. Roll axis and pitch axis can be held horizontally.
Disadvantages	Complex mechanism.

Second, in Hiryu-II, two thrusters for weight compensation were installed symmetrically with respect to the longitudinal direction. By aligning the thrust force generated by the left and right propellers with their moment arms and setting the rotation directions in opposite directions, it was possible to apply only a force in the direction of gravity to the mechanism. However, as proposed in this section, when a thrust force difference is applied to the left and right propellers based on the IMU measurement value in order to add a moment that suppresses torsional deformation around the roll axis, the reaction-torque due to the rotation of the propellers cannot be canceled out. Therefore, in order to cancel the reaction-torque regardless of the thrust force difference, we considered installing two propellers on each side, a total of four propellers, and appropriately determining the direction of rotation of each. The advantages and disadvantages with regard to the number of weight compensation thrusters for each unit are shown in Table II.

Finally, in Hiryu-II, the parallel link mechanism was offset in the longitudinal direction in order to avoid interference between the link mechanism and the propeller rotating sur-

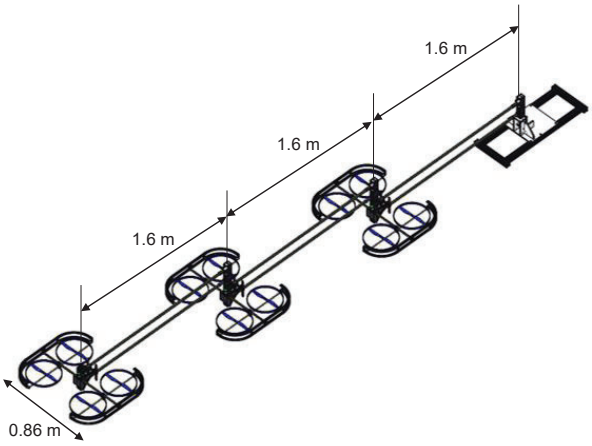

(a) Appearance.

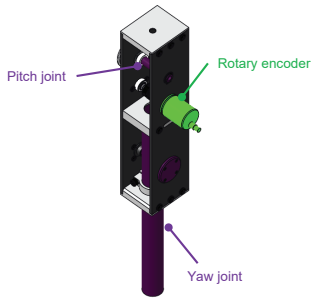

(b) Design improvements for proximal link in each unit.

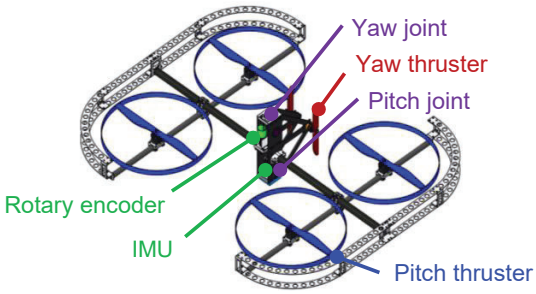

(c) Design improvements for distal link in each unit.

Fig. 3. 3D CAD model of the prototype Hiryu-II-B.

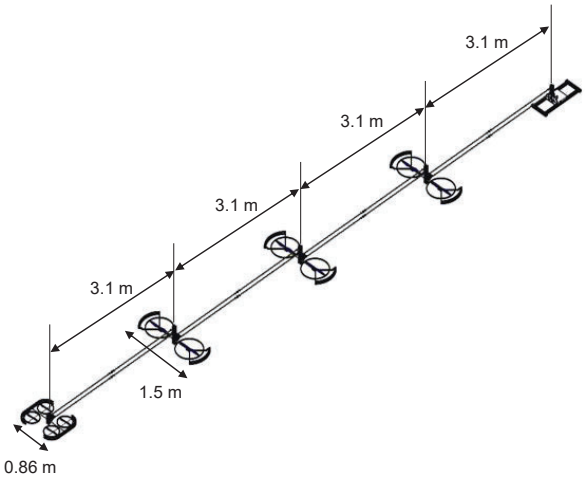

(a) Appearance.

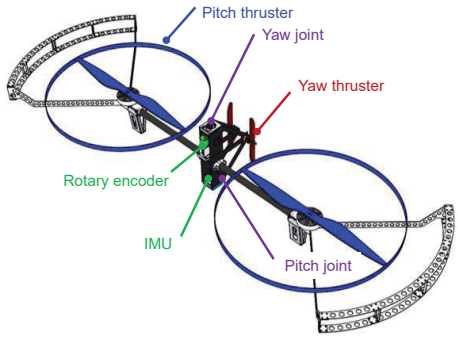

(b) Design of the distal link for i-th unit ($1 \leq i \leq 3$).

Fig. 4. 3D CAD model of the prototype Hiryu-II-C.

TABLE III. Specifications of the prototype Hiryu-II-B.

Length (horizontally extended)	4770 mm
Width	860 mm
Mass	14.8 kg
	(Arm:6.9 kg, Base:7.9 kg)
Payload (at arm end)	2.40 kg
Range of Motion	Pitch : ± 40 deg
	Yaw : ± 45 deg

face. However, there was a problem that the mechanism of the manipulator deformed greatly in the direction of gravity due to the moment caused by its own weight. Therefore, in proposed manipulators, as shown in Fig. 3b, the offset in the longitudinal direction was eliminated, and the moment due to its own weight was not applied to the mechanism.

A. Arm Structure Design

As a prototype for confirming the operating principle of the proposed manipulator, we developed Hiryu-II-B with a total length of 4.8 m shown in Fig. 3a and Hiryu-II-C with a total length of 12.4 m shown in Fig. 4a. In this paper, we will explain only the major changes from Hiryu-II, so please refer to the literature [14] if necessary.

The specifications of the prototype Hiryu-II-B are shown in Table III. A 3D CAD model is shown in Fig. 3 for the distal link and the proximal link of each unit. As seen in Fig. 3b, the design of the proximal link was changed so that the passive joint of the parallel link mechanism is coaxial with the yaw joint. Also, as shown in Fig. 3c, the design of the distal link was changed to install four thrusters for weight compensation and an IMU (BNO055, BOSCH). For pitch thrusters, A propeller with a diameter of 0.279 m, a pitch of 0.114 m, and a motor (Rctimer, MT2214-920KV) with a rated output of 420 W are used, and the maximum designed thrust force is 14.5 N per piece. Yaw thrusters are the same as before the improvement. The pitch and yaw joint angles are also measured with the rotary encoder as before the improvement. The range of motion of the yaw joint is limited to ± 45 deg. This is because the stopper parts are clamped to the yaw joint to avoid interference between the propeller rotation surface and the link mechanism. When the upper or lower limit of the range of motion is reached, the

TABLE IV. Specifications of the prototype Hiryu-II-C.

Length (horizontally extended)	12.4 m
Width	1470 mm
Mass	19.2 kg
	(Arm:11.3 kg, Base:7.9 kg)
Payload (at arm end)	2.40 kg
Range of Motion	Pitch : ±40 deg
	Yaw : ±45 deg

TABLE V. Performance comparison of two kinds of thruster. Motor "TAROT-6008-285KV" was adopted as two coupled thrusters for weight compensation, and motor "Rctimer-MT2214-920KV" was adopted as four coupled thrusters for weight compensation. However, the measured maximum thrust force of the four coupled thrusters was 10 N, which was even lower than the designed value.

Motor model number	TAROT 6008-285KV	Rctimer MT2214-920KV
Mass	177 g	55 g
Maximum thrust force	43.2 N	14.9 N (10 N in practice)

stopper parts come into contact with the link mechanism, and as a result, drag acts on the yaw joint.

Next, the specifications of the prototype Hiryu-II-C are as shown in Table IV. In order to cancel the reaction torque around the yaw axis, four thrusters are required. However, to drive many motors, the same number of motor drivers are required and the control law becomes more complicated. Therefore, as shown in Table V, we thought it would be suitable for the proposed manipulator to install as few actuators as possible, which have excellent thrust per mass. If the reaction torque around the yaw axis caused by the thrust force difference is small, it is better to install two thrusters for weight compensation on each unit. Compared with Hiryu-II-B, each parallel link mechanism was extended to 3-m-long, and the total length was 12.4-m-long. Since the distal link of 4-th unit is different from that of others, it is shown in Fig. 4b. 4-th unit is lighter than others, thus it is equipped with four thrusters for weight compensation. whereas other units are heavy and require large thrust force, thus two thrusters for weight compensation are installed.

B. Control system

Circuit board with a mass of 0.1 kg were installed on the distal link of each unit. The circuit board of each unit was connected with the circuit board of the base via Controller Area Network (CAN). Circuit board in each unit was electrically connected to one IMU, two rotary encoders, and thrusters installed in the same unit. As a result, the number of electrical cables that relay the most proximal link was reduced from 52 signal lines to 3 signal lines, resulting in weight reduction.

In order to keep the pitch thrusters horizontally, we propose two control algorithm shown in Fig. 5 and Fig. 6. Method 1, the desired pitch joint angle and the desired roll attitude are achieved by the three PID controllers. The control parameters for these three outputs are manually adjusted

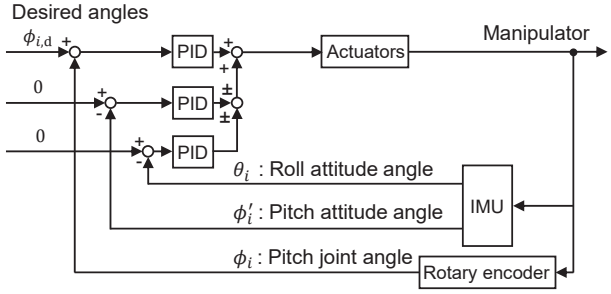

Fig. 5. Proposed control block diagram for weight compensation and horizontal holding of the manipulator (Method 1).

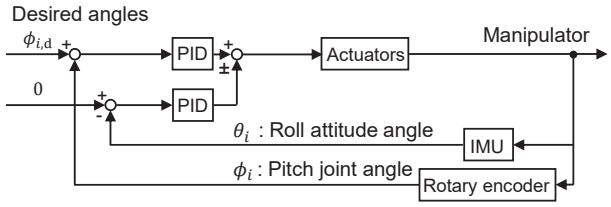

Fig. 6. Proposed control block diagram for weight compensation and horizontal holding of the manipulator (Method 2).

and sent to the actuator. The PWM electrical signal sent to motor drivers are saturated so that it does not exceed the rated output to prevent damage to the actuator. In contrast, in Method 2, the desired pitch joint angle and desired roll attitude are achieved with two PID controllers to simplify the control algorithm. With regard to the control block diagram of the yaw joint actuator, please refer to the literature [14].

III. EXPERIMENT

The experiment aims to confirm the feasibility of trajectory tracking and then to empirically measure the tracking accuracy. Unlike conventional joint drive manipulators, this system is novel and hard to determine the tracking accuracy in the design stage under the various unknown disturbance such as friction in the joint, structural deformation, and mechanical play in the parallel link mechanisms. Therefore the verification by the experiments is vital.

Operational experiments of the prototype were conducted at the Sagami Robot Industry Special Zone Pre-demonstration Field and the Naraha Remote Technology Development Center. Both the Sagami Robot Industry Special Zone Pre-Demonstration Field and the Naraha Remote Technology Development Center are facilities dedicated to the systematic evaluation of robotic systems in the field. The test environment is indoors, however an electric fan can be used to generate wind disturbance. The purpose of the experiment was to empirically evaluate the effects of torsional deformation around roll axis, generated thrust force, voltage drop owing to long distance for power supply, wiring bending resistance and mass, etc., and to realize a larger manipulator by the prototype.

A. Evaluation of control algorithm

The control algorithms proposed in section II were applied to the prototype, and an operation experiment was conducted

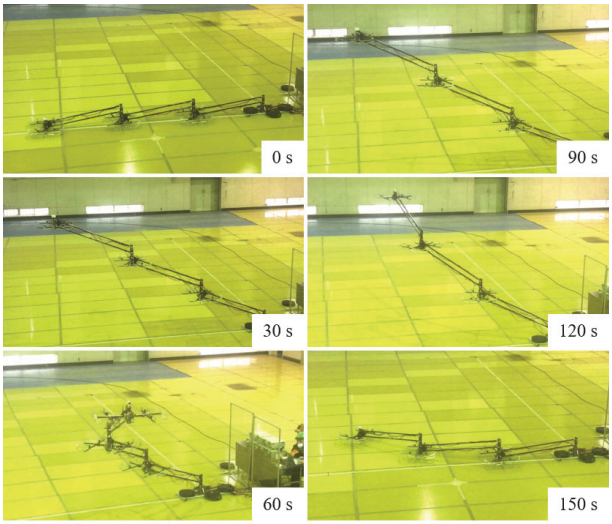

Fig. 7. Snapshot of an experiment to evaluate the control algorithm of method 1 with prototype Hiryu-II-B.

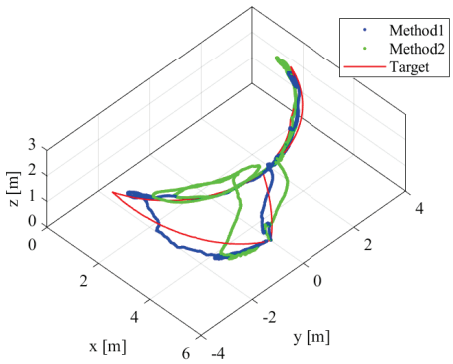

Fig. 8. Trajectory of the end position in experiments to evaluate the control algorithm of method 1 and method 2. The position of the base corresponds to the origin of the coordinate system.

with the prototype Hiryu-II-B. The same trajectory is given, and the control algorithms are evaluated based on the error of the end position calculated from the measured value of the encoder.

The snapshot of the experiment by method 1 is shown in Fig. 7, and the trajectory of the end position calculated from the measured values of the joint angle in method 1 and method 2 is shown in Fig. 8. The error of the end position in each of method 1 is 0.629 m on average, and 1.72 m at maximum. And the error of the end position in each of method 2 is 0.965 m on average, and 4.17 m at maximum. The two control algorithms produced significant differences, suggesting that Method 1 is suitable for controlling long-reach manipulators accurately.

B. Robustness against wind blow

In order to confirm the robustness of the arm, an operation experiment was conducted by applying wind blow. The

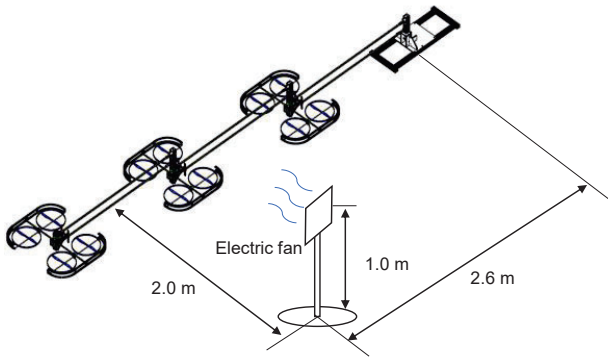

Fig. 9. Experimental condition.

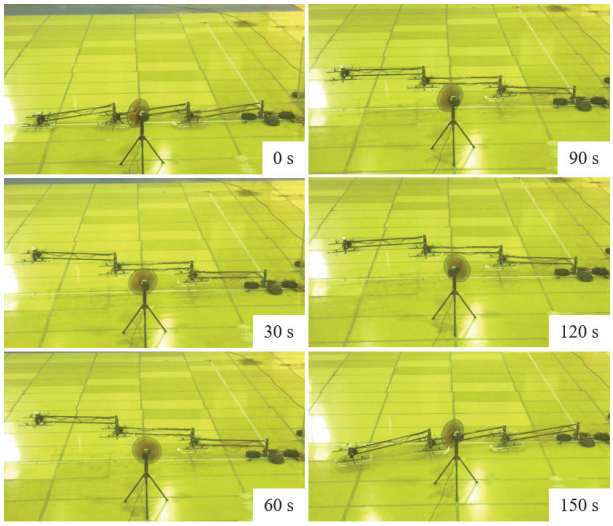

Fig. 10. Snapshot of the experiment to evaluate the robustness of the prototype Hiryu-II-B against wind blow.

experimental conditions are shown in Fig. 9. An unsteady wind was generated by sending a wind with a wind speed of 4.75 m/s and a wind volume of 2.67 m^3/s with a swing angle of 90 deg. In terms of control algorithm, method 1 was adopted. The snapshot of the operation test is shown in Fig. 10. Focusing on the error of the end position, it was 0.54 m on average, and 1.26 m at the maximum. It is considered that it was possible to show that the manipulator can cope with wind blow to some extent.

C. floating experiment with 12-m-long prototype

In Hiryu-II-B, the measured maximum thrust force of the thrusters for weight compensation was 10 N, and the maximum designed thrust force of 14.5 N could not be obtained. Therefore, as a larger prototype, Hiryu-II-C was adopted for evaluation.

Prior to float all units, an experiment was conducted in which only 2nd unit to 4-th unit were driven. A total weight of 40 kg was installed on the base to prevent rollover. The obtained results are shown in Fig. 11. The desired joint angles in trapezoidal shape were given and PID control was performed at the position level. We succeeded in floating the

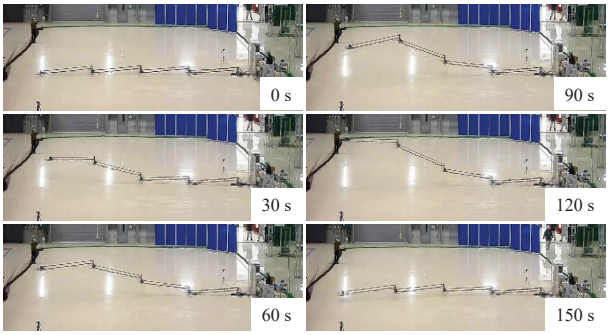

(a) Snapshot. Time corresponds to horizontal axis in Fig. 11b and Fig. 11c.

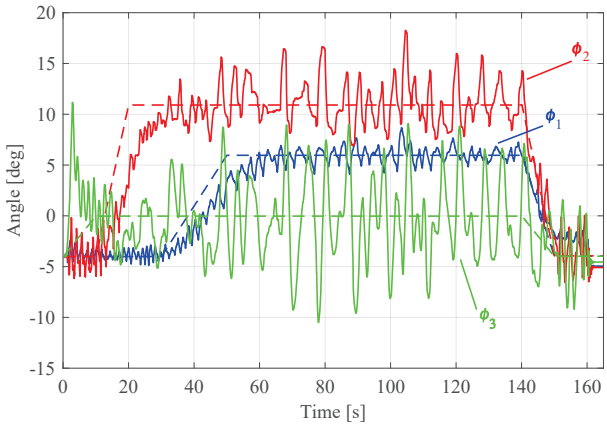

(b) Time history of pitch joint angles. The solid line represents the measured value, and the broken line represents the desired value. ϕ_i corresponds to pitch joint angle of i-th unit. Note that the pitch joints are defined as the absolute angle with the horizontal attitude 0 deg.

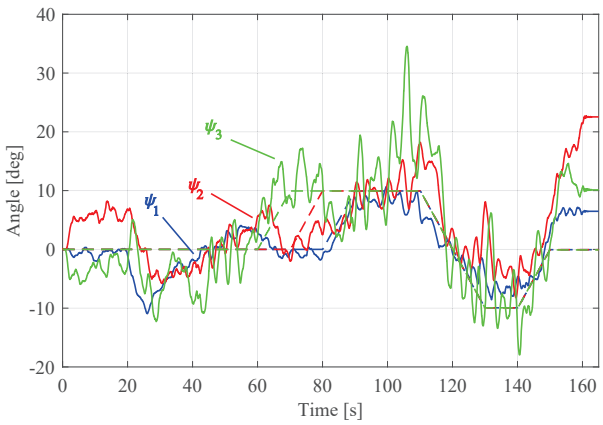

(c) Time history of yaw joint angles. The solid line represents the measured value, and the broken line represents the desired value. ψ_i corresponds to yaw joint angle of i-th unit. Note that the yaw joints are defined as the relative angle with the proximal link.

Fig. 11. Experiment of the prototype Hiryu-II-C in which only 2-nd unit to 4-th unit were driven.

three units prototype and swinging the end position to the left and right. The maximum length of position control achieved by the previous research was 6.6-m-long with 6 DOF, while Hiryu-II C achieved a maximum length of 9.3-m-long with 6 DOF. The time average of the error between the calculated

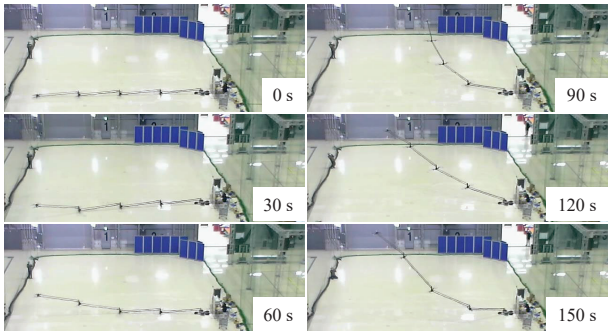

Fig. 12. Snapshot of the experiment floating all units of Hiryu-II-C.

end position from measured value by the encoder and the desired position was 1.13 m. It was not small due in part to the inclusion of near-ground movements.

Then, we performed driving experiments for all units. The desired values of all yaw joint angles were set to 0 deg, and only the pitch joint was driven. Snapshot of the experiment is shown in Fig. 12. As shown in Fig. 12, we succeeded in floating all the units. Focused on the thrust force for weight compensation after the floating of each unit, it was roughly constant. This is because the thrusters in each unit have a large moment arm. It was possible to show that the configuration of the proposed manipulator, which installs thrusters on the end position of the parallel link mechanism, is suitable for weight compensation when the scale is enlarged. Finally, from this experiment, we found that the large moment produced by the thruster causes the clamp of the stopper parts of the yaw joint to slip, and that the yaw joint of the 1st unit vibrates and becomes uncontrollable.

IV. DISCUSSION

Although we implemented a control algorithm that kept the roll attitude horizontal by introducing an IMU, it was difficult to control position of the yaw joint angle in 1-st unit. There are two possible solutions to solve this problem. One of the solution is to drive the yaw joint by thrusters that generates larger thrust force. Theoretically, the thrust force for driving the yaw joints should be small, however in practice, there were moments when a thrust force of more than saturated value was required for stabilizing. A propeller with a small diameter is desirable to avoid interference with the links, and an electrical ducted fan (EDF) with a high generating thrust force is considered to be suitable. The advantages of EDF compared to a normal propeller are higher energy efficiency and safety thanks to the outer housing. On the other hand, EDF has a disadvantage that the motor must be driven at a high speed to generate high thrust force due to the small diameter of the propeller. This means that the motor and the motor driver need to have thick wires to supply a large current, and we need to study the feasibility of this in a prototype.

Another solution is to positively utilize the torsional deformation for position control of the yaw joint angle. The

result of described experiments can be interpreted that the inclination of the thrusters for weight compensation due to torsional deformation generates a sufficient moment to drive the yaw joint. In the aforementioned experiments, the thrust force difference was applied by the PID controller based on the deviation of the roll attitude from the horizontal. The control performance of the manipulator could be improved by applying the thrust force difference based on the deviation of the yaw joint angle from the desired value instead.

As for the number of thrusters, we tested two thrusters and four thrusters. The advantages and disadvantages are summarized in Table II. At the beginning of the design stage, we thought much of the residual reaction torque by thrusters which may deteriorate the accuracy of the yaw joint control. However, the experiments did not find a significant difference between two thrusters and four thrusters for yaw joint control. So far, we consider two thrusters are a better design because of the simpler configuration and the higher thrust force.

V. CONCLUSIONS

This paper deals with breaking through the limit of maximum length and realizing a larger Hiryu manipulator with a prototype. We proposed to use inertial measurement units and microcontrollers in each unit to control thrusters to surppress torsional deformation. We also proposed to reduce the length of each electrical cable by controlling it locally, thus reducing its weight. The prototype Hiryu-II-B and Hiryu-II-C were developed while considering the advantages and disadvantages regarding the number of thrusters for weight compensation in each unit. Control algorithms are proposed to keep the pitch thrusters horizontal, and the effectiveness of the method to achieve the desired pitch joint angle and roll attitude by three PID controllers is demonstrated. As a result, the prototype which is 9.3-m-long with 6 DOF was controlled its joint positions and the prototype which is 12.4-m-long with 8 DOF was floated successfully. These results surpassed the maximum length achieved by previous studies by about 3-m-long. In addition, the prototype showed that the system can cope with wind blowing to some extent.

We will continue to develop larger manipulator with a length of 20-m-long and a payload of 5 kg. We are investigating the use of electrical ducted fan to drive the yaw joint and the use of torsional deformation around the roll axis to control the position of the yaw joint angle. we will also plan to conduct several experiments with various motion profiles to assess the performance of the proposed manipulator quantitatively, and also implement end effector force control.

ACKNOWLEDGMENT

This work was supported in part by the New Energy and Industrial Technology Development Organization (NEDO) and in part by JSPS KAKENHI under Grant JP18K04044. Operational experiments of the prototype were conducted at the Sagami Robot Industry Special Zone Pre-demonstration Field and the Naraha Remote Technology Development Center.

REFERENCES

[1] A. Horigome, G. Endo, K. Suzumori, and H. Nabae, "Design of a weight-compensated and coupled tendon-driven articulated long-reach manipulator," *2016 IEEE/SICE International Symposium on System Integration (SII)*, pp. 598–603, 2016.

[2] G. Endo, A. Horigome, and A. Takata, "Super dragon: A 10-m-long-coupled tendon-driven articulated manipulator," *IEEE Robotics and Automation Letters*, vol. 4, no. 2, pp. 934–941, April 2019.

[3] D. Keller, Y. Perrot, L. Gargiulo, J. P. Friconneau, V. Bruno, R. Le, B. Soler, M. Itchah, D. Ponsort, P. Chambaud, J. Bonnemason, S. Lamy, and Y. Measson, "Demonstration of an iter relevant remote handling equipment for tokamak close inspection," in *2008 IEEE/RSJ International Conference on Intelligent Robots and Systems*, Sep. 2008, pp. 1495–1500.

[4] Y. Perrot, L. Gargiulo, M. Houry, N. Kammerer, D. Keller, Y. Measson, G. Piolain, and A. Verney, "Long-reach articulated robots for inspection and mini-invasive interventions in hazardous environments: Recent robotics research, qualification testing, and tool developments," *Journal of Field Robotics*, vol. 29, no. 1, pp. 175–185, 2 2012. [Online]. Available: https://doi.org/10.1002/rob.20422

[5] G. Endo, H. Yamada, A. Yajima, M. Ogata, and S. Hirose, "A passive weight compensation mechanism with a non-circular pulley and a spring," in *2010 IEEE International Conference on Robotics and Automation*, May 2010, pp. 3843–3848.

[6] T. Morita, F. Kuribara, Y. Shiozawa, and S. Sugano, "A novel mechanism design for gravity compensation in three dimensional space," in *2003 IEEE/ASME International Conference on Advanced Intelligent Mechatronics (AIM)*, Aug 2003, pp. 163 – 168 vol.1.

[7] S. Hirose, T. Ishii, and A. Haishi, "Float arm v: hyper-redundant manipulator with wire-driven weight-compensation mechanism," in *2003 IEEE International Conference on Robotics and Automation (Cat. No.03CH37422)*, vol. 1, Sep. 2003, pp. 368–373 vol.1.

[8] G. Endo, T. Hagiwara, Y. Nakamura, H. Nabae, and K. Suzumori, "A proposal of super long reach articulated manipulator with gravity compensation using thrusters," in *2018 IEEE/ASME International Conference on Advanced Intelligent Mechatronics*, IEEE. IEEE, 2018, pp. 1414–1419.

[9] J. A. Silva Rico, G. Endo, S. Hirose, and H. Yamada, "Development of an actuation system based on water jet propulsion for a slim long-reach robot," *ROBOMECH Journal*, vol. 4, no. 1, p. 8, Mar 2017. [Online]. Available: https://doi.org/10.1186/s40648-017-0076-4

[10] H. Ando, Y. Ambe, A. Ishii, M. Konyo, K. Tadakuma, S. Maruyama, and S. Tadokoro, "Aerial hose type robot by water jet for fire fighting," *IEEE Robotics and Automation Letters*, vol. 3, no. 2, pp. 1128–1135, April 2018.

[11] H. Ando, Y. Ambe, T. Yamaguchi, M. Konyo, K. Tadakuma, S. Maruyama, and S. Tadokoro, "Fire fighting tactics with aerial hose-type robot " dragon firefighter "," in *2019 IEEE International Conference on Advanced Robotics and its Social Impacts (ARSO)*, Oct 2019, pp. 291–297.

[12] H. Yang, S. Park, J. Lee, J. Ahn, D. Son, and D. Lee, "Lasdra: Large-size aerial skeleton system with distributed rotor actuation," in *2018 IEEE International Conference on Robotics and Automation*, IEEE. IEEE, 2018, pp. 7017–7023.

[13] S. Park, J. Lee, J. Ahn, M. Kim, J. Her, G. Yang, and D. Lee, "Odar: Aerial manipulation platform enabling omnidirectional wrench generation," *IEEE/ASME Transactions on Mechatronics*, vol. 23, no. 4, pp. 1907–1918, Aug 2018.

[14] Y. Ueno, T. Hagiwara, H. Nabae, K. Suzumori, and G. Endo, "Development of hiryu-ii: A long-reach articulated modular manipulator driven by thrusters," *IEEE Robotics and Automation Letters*, vol. 5, no. 3, pp. 4963–4969, 2020.