T2R2 東京科学大学 リサーチリポジトリ
Science Tokyo Research Repository

論文 / 著書情報
Article / Book Information

Title	Development of Lightweight Sprawling-type Quadruped Robot TITAN-XIII and its Dynamic Walking
Author	Satoshi Kitano, Shigeo Hirose, Gen Endo, Edwardo F. Fukushima
Journal/Book name	IEEE/RSJ International Conference on Intelligent Robots and Systems(IROS), , , pp. 6025-6030
Issue date	2013, 11
DOI	http://dx.doi.org/10.1109/IROS.2013.6697231
URL	http://www.ieee.org/index.html
Copyright	(c)2013 IEEE. Personal use of this material is permitted. Permission from IEEE must be obtained for all other users, including reprinting/republishing this material for advertising or promotional purposes, creating new collective works for resale or redistribution to servers or lists, or reuse of any copyrighted components of this work in other works.
Note	このファイルは著者（最終）版です。 This file is author (final) version.

Powered by T2R2 (Science Tokyo Research Repository)

Development of Lightweight Sprawling-type Quadruped Robot TITAN-XIII and its Dynamic Walking

Satoshi Kitano[1], Shigeo Hirose[1], Gen Endo[1] and Edwardo F. Fukushima[1]

***Abstract*— In this paper, we discuss the development of the sprawling-type quadruped robot named "TITAN-XIII" and its dynamic walking algorithm. We develop an experimental quadruped robot especially designed for dynamic walking. Unlike dog-like robots, the prototype robot looks like a four-legged spider. As an experimental robot, we focus on the three basic concepts: lightweight, wide range of motion and ease of maintenance. To achieve these goals, we introduce a wire-driven mechanism using a synthetic fiber to transmit power to each axis making use of this wire-driven mechanism, we can locate the motors at the base of the leg, reducing, consequently, its inertia. Additionally, each part of the robot is unitized, and can be easily disassembled. As a dynamic walking algorithm, we proposed what we call "longitudinal acceleration trajectory". This trajectory was applied to intermittent trot gait. The algorithm was tested with the developed robot, and its performance was confirmed through experiments.**

I. INTRODUCTION

In order to go over rough terrain, legged robots are more effective than wheeled or crawler robots. Although there are many kinds of legged robots, we consider using at four-legged robot, which is the minimum number of legs to perform static walking; like a crawl gait, is the most practical in various type of legged robots. Among the four-legged robots being developed currently we have BigDog[1], HyQ[2] and Tekken[3]. BigDog was developed by Boston Dynamics and makes use of hydraulic actuators. HyQ makes use of both electric and hydraulic actuators. The Tekken is a small quadruped robot which makes use of a electric motor. These robots have the same characteristic which is having a mammal-type configuration of legs. However there are also an sprawling-type configuration of legs in the nature (Fig.1). We define a mammal-type robot as a robot whose proximal joint rotates around the roll axis, and the following two distal joints rotates the pitch axis. The leg links of the mammal-type robots are normally arranged vertically. We also define a sprawling-type robot as a robot whose proximal joint performing a rotation in the yaw axis and its following distal joints performing a rotation in the pitch axis. The first part of the leg is horizontal and its following part of the leg is vertical when a robot standing. Comparing the two types of configuration of the legs, sprawling-type robot has wider supporting polygon and lower center of gravity than mammal type. Additionally, in the case of an sprawling-type robot, each foot is far enough from other feet to prevent collision between each other. It means an sprawling-type robots has a wider range of motion of the leg than mammal-type robots. In order to go over rough terrain, high stability and wide range of motion are important. Thus, we have been developing sprawling-type quadruped robot "TITAN" series[4].

Among the TITAN series, TITAN-VIII[5] was developed as an experimental quadruped robot, and more than 70 TITAN-VIII was sold among researchers to promote study of quadruped robot. However, TITAN-VIII was not suitable for performing dynamic walking, such as trot gait, because its power weight ratio is too low. Therefore we developed a lightweight quadruped robot TITAN-XIII, shown in Fig.2, which is capable of performing dynamic walking.

In this paper, we propose a new dynamic walking algorithm and describe the mechanism of TITAN-XIII, as well an experimental results.

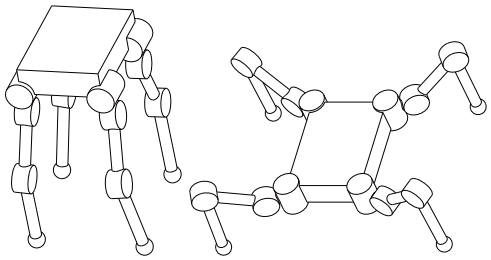

(a) mammal-type (b) sprawling-type

Fig. 1. Type of Four-legged Robot



Fig. 2. Overview of TITAN-XIII

II. DYNAMIC WALKING

The trot gait known as dynamic gait, is characterized by moving diagonal legs at the same time. Once it only needs to control two pair of legs, a trot gait is easier to control than other gaits; e.g. crawl gait. Additionally when

[1] S. Kitano, S. Hirose, G. Endo and E. F Fukushima are with the Department of Mechano-Aerospace Engineering, Tokyo Institute of Technology, 2-12-1 Ookayama, Meguroku, Tokyo, 152-8552, Japan, skitano.ac at m.titech.ac.jp, gendo, hirose at mes.titech.ac.jp

a robot tumbles around its diagonal supporting line, the swinging leg may contact the ground, and this may prevent the robot from completely turning over. Because of these characteristic, we consider the trot gait as "safety gait"[6] which will be addressed as the basic walking gait. In former studies, we proposed "intermittent trot gait"[7] which has four leg stance phase to increase stability when it changes the supporting leg. As the body movement, we also proposed "sway compensation trajectory"[8] which sways body with lateral axis to be stable in two legs supporting phase, and "3D sway compensation"[9] which is extended from sway compensation trajectory by adding 3-dimensional motion.

However, these swaying compensation has a problem which is the difficulty of walking at high speed since it needs to sway its body along the lateral axis. Thus, we proposed a simpler trajectory called "longitudinal acceleration trajectory"(LAT) which keeps stability by accelerating the body along longitudinal axis like an inverted pendulum. We applied this trajectory to the intermittent trot gait, and call it LA-type intermittent trot gait. LAT is used only in dynamic two leg supporting phase. When the robot is in static four legs supporting phase, the body moves at constant velocity. Even if a robot tumbles in two legs supporting phase by some disturbance like a wind, four legs supporting phase can return the robot to nominal posture to continue walking.

To control the body in 2 legs supporting phase, just simple inverted pendulum control is enough, but we introduced the "Linear Inverted Pendulum Mode"(LIPM)[10] known as walking algorithm for a bipedal robot. LIPM consider the robot as a mass point 'm' and no-weight expandable leg(Fig.3) in order to keep the height of the body. If the leg exerts the force which compensate the gravity force along the leg, the mass point does not fall to the ground but moves along horizontal axis and keep its height. The position of the mass point while moving is described by Eqn.1.

$$\ddot{x} = \frac{g}{z_c} x. \tag{1}$$

If the initial position of the mass point is $x_0 < 0$, the minimum initial velocity to move the mass point from minus direction to plus direction can be described by Eqn.2.

$$v_{0min} = -x_0 \sqrt{\frac{g}{z_c}}. \tag{2}$$

Fig.4 shows the diagonal supporting line that the robots tumble around. This line is inclined to walking direction in case of quadruped robot. Thus we need to apply LIPM around this line. Considering θ as the angle between the normal direction of movement and the diagonal supporting line, we can describe the direction of movement in function of time by equation3.

$$x'(t) = x(t)/cos(\theta). \tag{3}$$

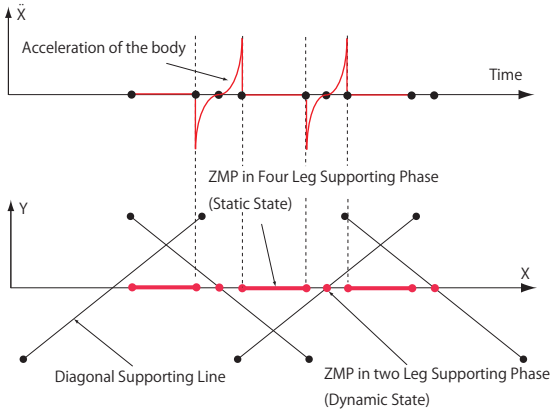

Fig. 3. Basic Idea of LA-type Intermittent Trot Gait

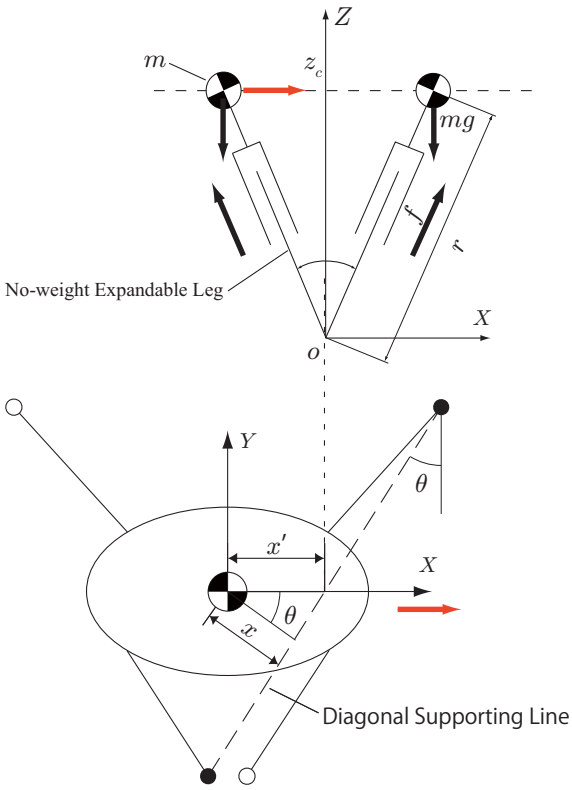

Fig. 4. Linear Inverted Pendulum Mode applied to LA-type Intermittent Trot Gait

III. Design of TITAN-XIII

A. LEG MECHANISM

In order to perform dynamic gait, the robot; especially its leg, must be lightweight. Thus we used wire drive mechanism with a synthetic fiber cable wire. And we also designed TITAN-XIII carefully for not only high performance but also good maintainability.

The photo, the simplified figure and the detail drawing of the leg structures are shown in Fig.5, Fig.6, Fig.7. This

leg mechanism is composed of the planer mechanism with 2DOF and the mechanism which rotate it, having 3DOF in total.

In dynamic walking, the inertia of the swinging leg should be small to reduce its dynamic effect. Therefore, TITAN-XIII uses a wire-driven mechanism in Axis2 and Axis3. With this mechanism, the motors can be located in the base structure of the leg and its inertia can be reduced remarkably. The link connecting each axis is made of a CFRP pipe which has high strength and is very light, reducing the weight of the leg. Furthermore, we do not locate this link on the straight line which connects each axis, but on the line which has an offset L2 from the connected line(Fig.6). The reason for introducing this offset is to enlarge range of motion and increase the strength of fixing the CFRP pipes. If CFRP locate on the straight line which connects each axis, the link cannot be fold in parallel because of collision between Link2 and Link3. But if there is an offset, this collision can be avoided, the leg can be folded in parallel and the range of motion is expanded. By using this offset the range of motion in the opposite direction will be reduced, but that range of motion is not necessary for walking. Because of this offset, the CFRP pipe can be inserted across the shaft of each axis without collision with the shaft. Therefore this structure can increase rigidity of the link due to the larger area of the glue.

Although TITAN-VIII uses a parallel link mechanism to keep its foot parallel to the body, we decide not to install any mechanism for a foot. As a mass of the end of the leg largely affects the inertia of the leg, we decided to only install a lightweight rubber ball as the foot in order to increase friction coefficient.

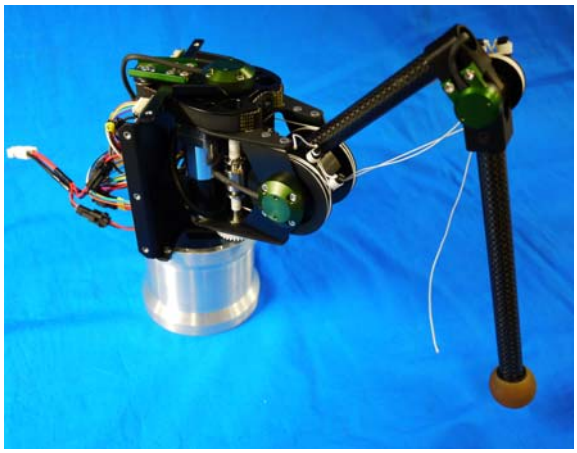

Fig. 5. Leg of TITAN-XIII

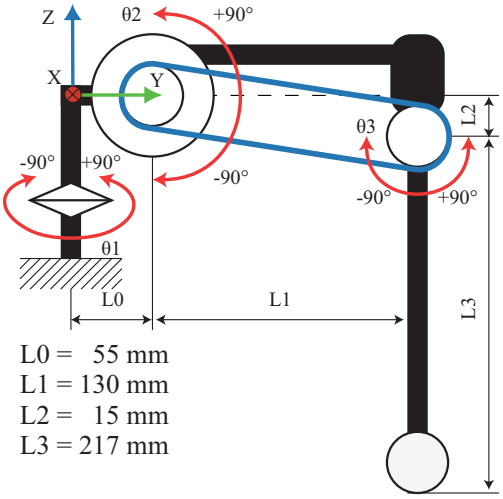

Fig. 6. Structure of Leg

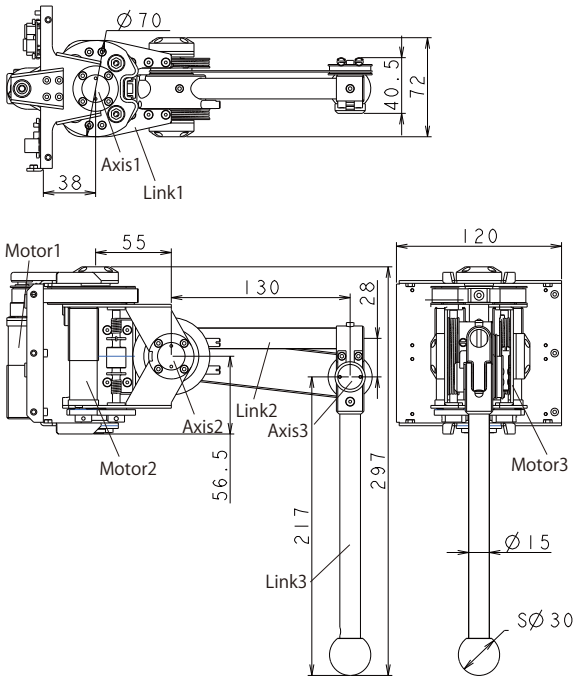

Fig. 7. Leg Mechanism of TITAN-XIII

In order to improve the robot maintainability, the thigh-shank-unit which contains the legs and wire-driven mechanism to actuate axis2 and axis3, can be easily separated from the base-unit by only removing few screws(Fig.8)

The base-unit, which is part of the robot's body, has its back equipped with a micro controller and a power amplifier(Hibot, TitechSH2 Tiny Controller and 1BLDC Power Module), as well as the axis1 motor. This motor, does not use a wire to drive the axis1, but a timing belt as transmission and reduction mechanism. This pulley shown in Fig.9 does not have any tooth of gear but have a dent and a hole to fix timing

belt directly to the pulley to execute the walking motor, the joint does not need to rotate over 360 deg. By pushing the tensioner plate with a screw, the timing belt is fixed to the pulley with the dent, which also serve as a tensioner for the timing belt. All the motors used to drive axis1,2 and 3 are identical: brush-less with planetary gear head(Nippo Denki KK., FX1206-011; maximum output 68.5W). To measure the angle of each axis, a 16bit magnetic encoder(AVAGO, AEAT-6600-T16) is coupled directly to each axis.

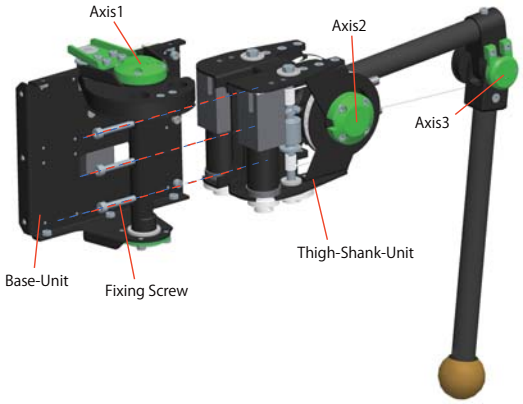

Fig. 8. Disassembling of TITAN-XIII

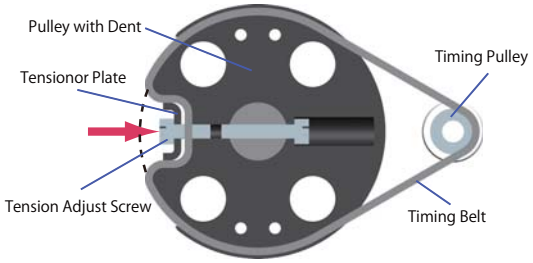

Fig. 9. Timing belt mechanism of Axis1, composed of small timing pulley and big pulley which has no tooth of gear, but has dent to fix timing belt.

B. WIRE-DRIVEN MECHANISM

As we described before, TITAN-XIII uses a wire-driven mechanism to position the motors of Axis2 and Axis3 on the base of the thigh-shank-unit. Additionally, if a timing belt and pulley or gear mechanism is used as the final stage of reduction mechanism, they need larger and heavier mechanism because of they have to support a load by only one or few teeth. However in case of wire-driven mechanism as the final stage of reduction mechanism, it can support load by whole surface of the pulley and transmit power with no backlash. Former robots, TITAN-VIII used stainless wires which were difficult to maintain its tension because stainless wires are hard to bend and easily make plastic deformation. TITAN-XIII, though, uses a new wire material which is a synthetic fiber cable (Hayami industry, DY-3815ZL(Fig.10)), which is consists of the core by a PBO(poly(p-phenylene-2,6-benzobisoxazole)) fiber called Zylon and the sleeve by a UHPE(Ultra High Molecular Weight Polyethylene) fiber called Dyneema. TABLE I shows a comparison between these new material and stainless wires. The tension strength of these new material is twice as strong as of stainless wire, and the specific strength is more than ten times higher.

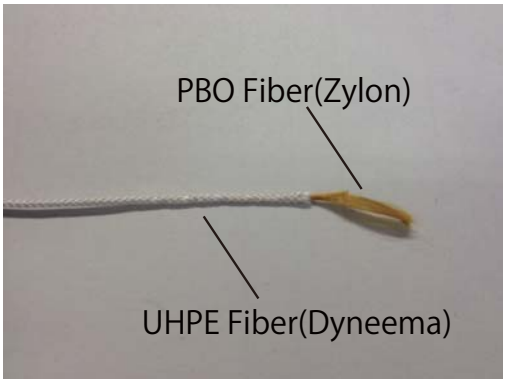

Fig. 10. Hayami Industry: DY-3815ZL

TABLE I
CHARACTERISTIC OF WIRE

Material	Tension Strength	Specific Gravity	Specific Strength
Zylon	5.8 GPa	1.54 g/cm^2	3.76 Nm/kg
Dyneema	4.4 GPa	0.97 g/cm^2	4.53 Nm/kg
Stainless Steel	2.8 GPa	7.7 g/cm^2	0.36 Nm/kg

Another interesting characteristic of this new wire material is that its minimum bending radius can be smaller than stainless wire. Because of this characteristic we can use the pulleys with smaller radius than former wire-driven mechanism. Fig.11 shows the overview of wire-driven mechanism applied to TITAN-XIII. Due to its new wire material, the diameter of the input pulley is only 5mm and we can locate the input pulley with a right angle to output pulley to make the whole mechanism compact. As a result, we composed the wire-driven mechanism which is compact and has a high reduction ratio(8.5:1).

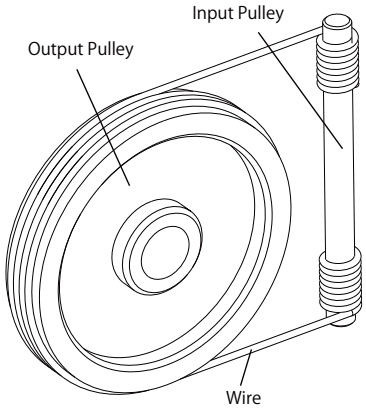

Fig. 11. Wire Drive Mechanism

A wire-driven mechanism needs a tensioner to compensate its expansion. We introduce a co-axial tensioner shaft shown in Fig.12. This shaft is composed of core shaft, outer shaft and one-way clutch connecting two shafts. Because of the one-way clutch, each shaft can only rotate in one direction which tightens the tension of the wire. The tension of the wire can be easily adjusted continuously by rotating one shaft while the other is fixed. Additionally, the end of the wire is fixed by just hooking it to a small gap of the shaft after winding the wire around shaft several times. From the Euler's belt formula, the force needed to fix at the end of the wire is drastically reduced according to the number of turns, and it can easily detach from the gap.

We install this co-axial tensioner shaft to the wire-driven mechanism as the input pulley.

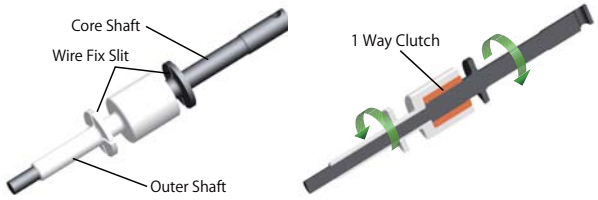

(a) Overview (b) Cross section view

Fig. 12. Co-Axial Tensioner Shaft

C. TOTAL SYSTEM

We developed TITAN-XIII shown in Fig.13 and its specification are shown in TABLE II. TITAN-XIII is composed of four identical leg units described before, being easily fixable by the replacement by a new whole leg in case of breaking. We designed the main body of the robot as monocoque structure, by connecting base-units of leg, top and bottom plates to each other for reducing the weight and increasing the rigidity. The lithium ferrite battery(A123, APR18650, 26.4V) is equipped inside the body as shown in Fig.14. The configuration of legs is symmetric for a easy omni-directional walking. Each leg is connected by a CAN bus, and power source. The external computer, which generates walking motion and calculates desired angle of joints, sends a command to each leg via CAN bus.

Comparing TITAN-XIII and TITAN-VIII, the weight of TITAN-XIII is less than a quarter of the weight of TITAN-VIII. Although the payload of TITAN-XIII was decreased, expected velocity is twice higher than TITAN-VIII, because of higher power weight ratio, which is three times higher than TITAN-VIII.



Fig. 13. TITAN-XIII

TABLE II
SPECIFICATION OF TITAN-XIII AND TITAN-VIII

	TITAN-XIII	TITAN-VIII
Size(LxWxH)	420x420x300 mm	400x600x250 mm
Weight(no battery)	4.85 kg	22 kg
Weight(with battery)	5.2 kg	27 kg
Max Walking Velocity	1.0 m/s	0.4 m/s
Payload	1.0 kg	5.0 kg
Battery run time	approx. 0.5 h	approx. 1 h
Total output of motors	822 W	1080 W
Power Weight Ratio	170 W/kg	50 W/kg

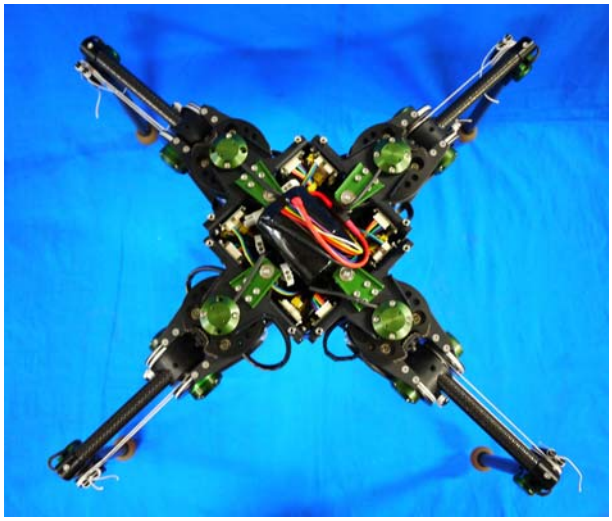

Fig. 14. Top View of TITAN-XIII

IV. EXPERIMENT

We carried out an experiment of "LA-type intermittent trot gait" with TITAN-XIII. Fig.15 shows the series of photos taken during the walking experiment. In this time power was supplied from the external power source and also each position command was sent from external laptop via CAN.

The parameters of walking were velocity of 0.39m/s and duty ratio of 0.59. As a foot trajectory in swing phase, we uses cycloid curve because of the terminal vertical velocity is 0. its The body was always stable and kept horizontal to the ground during walking. The effectiveness of LA-type intermittent trot was confirmed by this experiment. Furthermore, maximum velocity of TITAN-XIII is 0.71m/s at duty ratio 0.52 with the proposed gait was observed in the experiments. We believe this maximum velocity can be increased by optimizing its leg trajectory; especially in swinging phase.

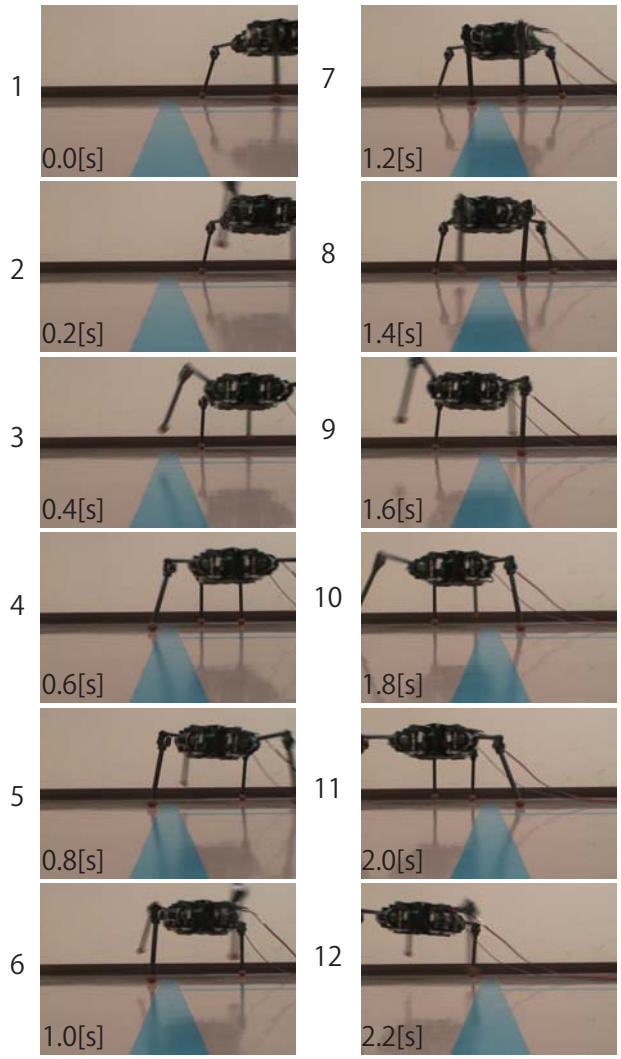

Fig. 15. Experiment of LA-type Intermittent Trot Gait with TITAN-XIII

V. CONCLUSIONS

In this paper, we proposed the a simpler trajectory, "longitudinal acceleration trajectory", which keeps the body of the robot stable in dynamic two legs supporting phase by only longitudinal acceleration and deceleration for faster dynamic walking. Then we discussed the development of the lightweight quadruped robot TITAN-XIII especially its leg mechanism. We also described the result of walking experiments. In the walking experiments, by using "LA-type intermittent trot gait", TITAN-XIII could perform dynamic walking stably. As a future plan, we will equip some sensors such as an acceleration sensor, a depth sensor on the body and touch sensors on the each foot in order to recognize an unknown environment. After that, we will develop the terrain adaptive walking algorithm expanded from LA-type intermittent trot gait, and carry out the experiment of the algorithm with TITAN-XIII in a test field.

REFERENCES

[1] M. Raibert, "BigDog, the Rough-Terrain Quadruped Robot," in *Proceedings of the 17th IFAC World Congress, 2008*, M. J. Chung, Ed., vol. 17, no. 1.

[2] C. Semini, N. G. Tsagarakis, E. Guglielmino, M. Focchi, F. Cannella, and D. G. Caldwell, "Design of hyq, a hydraulically and electrically actuated quadruped robot," *Proceedings of the Institution of Mechanical Engineers, Part I: Journal of Systems and Control Engineering*, vol. 225, no. 6, pp. 831–849, 2011. [Online]. Available: http://pii.sagepub.com/content/225/6/831.abstract

[3] Y. Fukuoka, H. Kimura, Y. Hada, and K. Takase, "Adaptive dynamic walking of a quadruped robot 'tekken' on irregular terrain using a neural system model," in *Robotics and Automation, 2003. Proceedings. ICRA '03. IEEE International Conference on*, vol. 2, sept. 2003, pp. 2037 – 2042 vol.2.

[4] S. Hirose, Y. Fukuda, K. Yoneda, A. Nagakubo, H. Tsukagoshi, K. Arikawa, G. Endo, T. Doi, and R. Hodoshima, "Quadruped walking robots at tokyo institute of technology," *Robotics Automation Magazine, IEEE*, vol. 16, no. 2, pp. 104–114, 2009.

[5] K. Arikawa and S. Hirose, "Development of quadruped walking robot titan-viii," in *Intelligent Robots and Systems '96, IROS 96, Proceedings of the 1996 IEEE/RSJ International Conference on*, vol. 1, Nov, pp. 208–214 vol.1.

[6] S. Hirose and K. Yoneda, "Toward development of practical quadruped walking vehicles," *Journal of Robotics and Mechatronics*, vol. 4, no. 6, pp. 498–504, 1993.

[7] K. Yoneda, H. Iiyama, and S. Hirose, "Intermittent trot gait of a quadruped walking machine dynamic stability control of an omnidirectional walk," in *Robotics and Automation, 1996. Proceedings., 1996 IEEE International Conference on*, vol. 4, Apr, pp. 3002–3007 vol.4.

[8] K. Yoneda and S. Hirose, "Dynamic and static fusion gait of a quadruped walking vehicle on a winding path," in *Robotics and Automation, 1992. Proceedings., 1992 IEEE International Conference on*, May, pp. 143–148 vol.1.

[9] R. Kurazume, S. Hirose, and K. Yoneda, "Feedforward and feedback dynamic trot gait control for a quadruped walking vehicle," in *Robotics and Automation, 2001. Proceedings 2001 ICRA. IEEE International Conference on*, vol. 3, pp. 3172–3180 vol.3.

[10] S. Kajita and K. Tani, "Study of dynamic biped locomotion on rugged terrain-derivation and application of the linear inverted pendulum mode," in *Robotics and Automation, 1991. Proceedings., 1991 IEEE International Conference on*, Apr, pp. 1405–1411 vol.2.